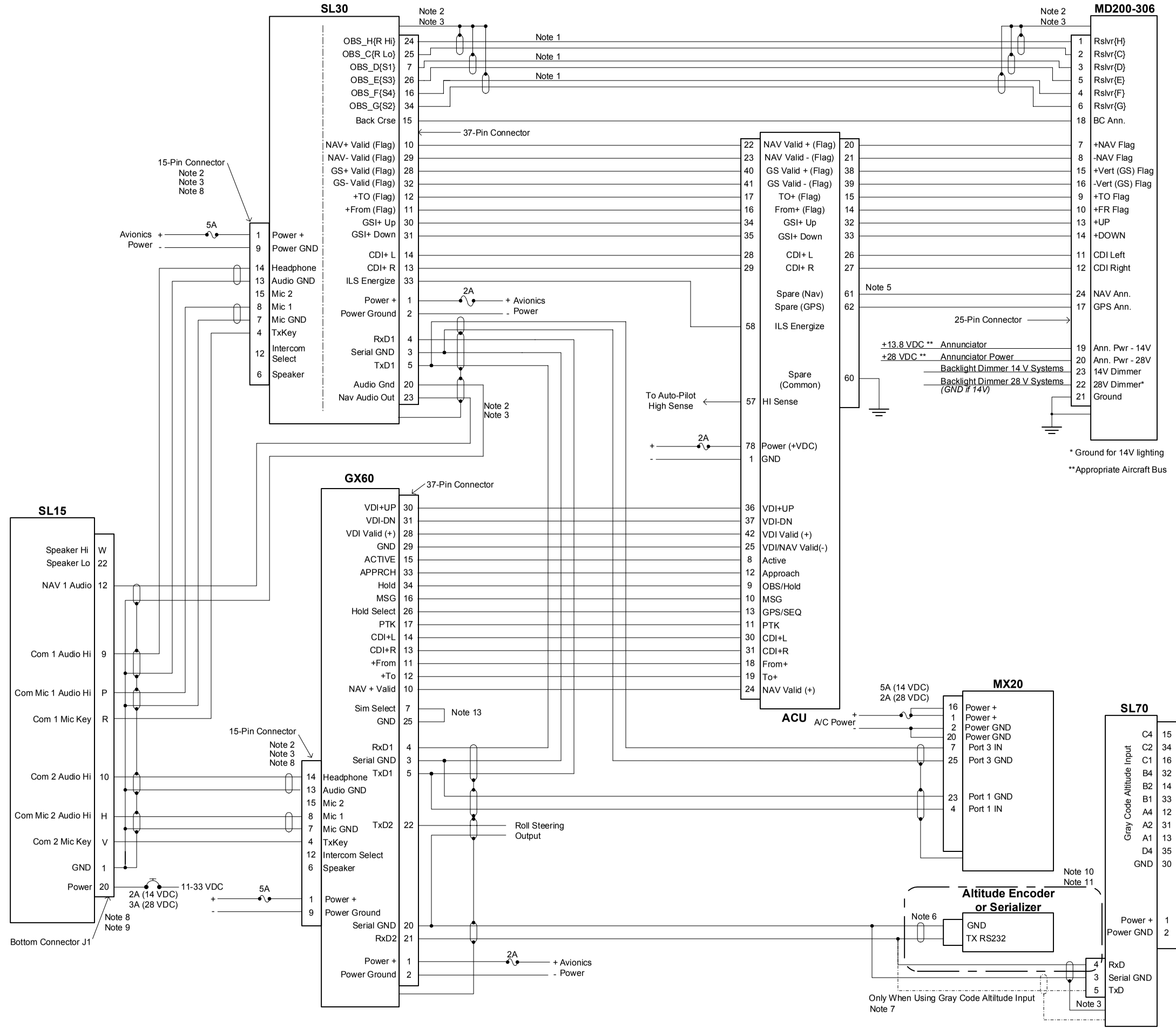

Rev	Rev Date	Reference
--		Initial distribution
A	4/16/01	Serial port change to support new SL30 Interface and GPS roll steering output.
B	4/19/02	Added Heater power and ground wire connections for the MX20.

NOTES:

1. Use shielded cable for Resolver signals.
2. Connect cable shields to the mounting frame: pigtails < 1.25 inches.
3. Connect shields to chassis ground at both ends of each shielded cable.
4. Reference the ACU installation manual if installing NAV/GPS source selector.
5. ILS and spare annunciator relays are only available in the Mod A ACU.
6. Terminate shield to within 2 inches of connector. Heat shrink over edges.
7. Either a serial or parallel altitude encoder may be installed. A serial version is the perferred option. In this diagram, the parallel installation is identified by -·-·-·-.
8. The audio ground and mic ground connections may use a common point on the audio panel.
9. Not all audio panel connections are shown on this drawing due to the variances in installations. Consult the SL15 installation manual.
10. If the installation is utilizing gray code altitude input and the SL70 is being used as a serializer, do not install the altitude encoder or serializer shown.
11. Altitude encoders are not UPS Aviation Technologies-provided equipment. Refer to the appropriate encoder installation manual to ensure proper power and signal connections.
12. This diagram is provided to show the interconnection between UPS AT units. Full wiring diagrams for each unit are provided in the appropriate installation manuals. Refer to all documentation to ensure successful installation.
13. Simulator mode if left open. Connect pin 7 to ground for normal operation.

UPS Aviation Technologies

2345 Turner Rd, SE
Salem, OR 97302

Phone: 503-581-8101
www.upsat.com

Typical Full Stack Interconnection Diagram with One SL30

Drawing No.	Revision	Revision Date
SCH 0104	B	4/19/02