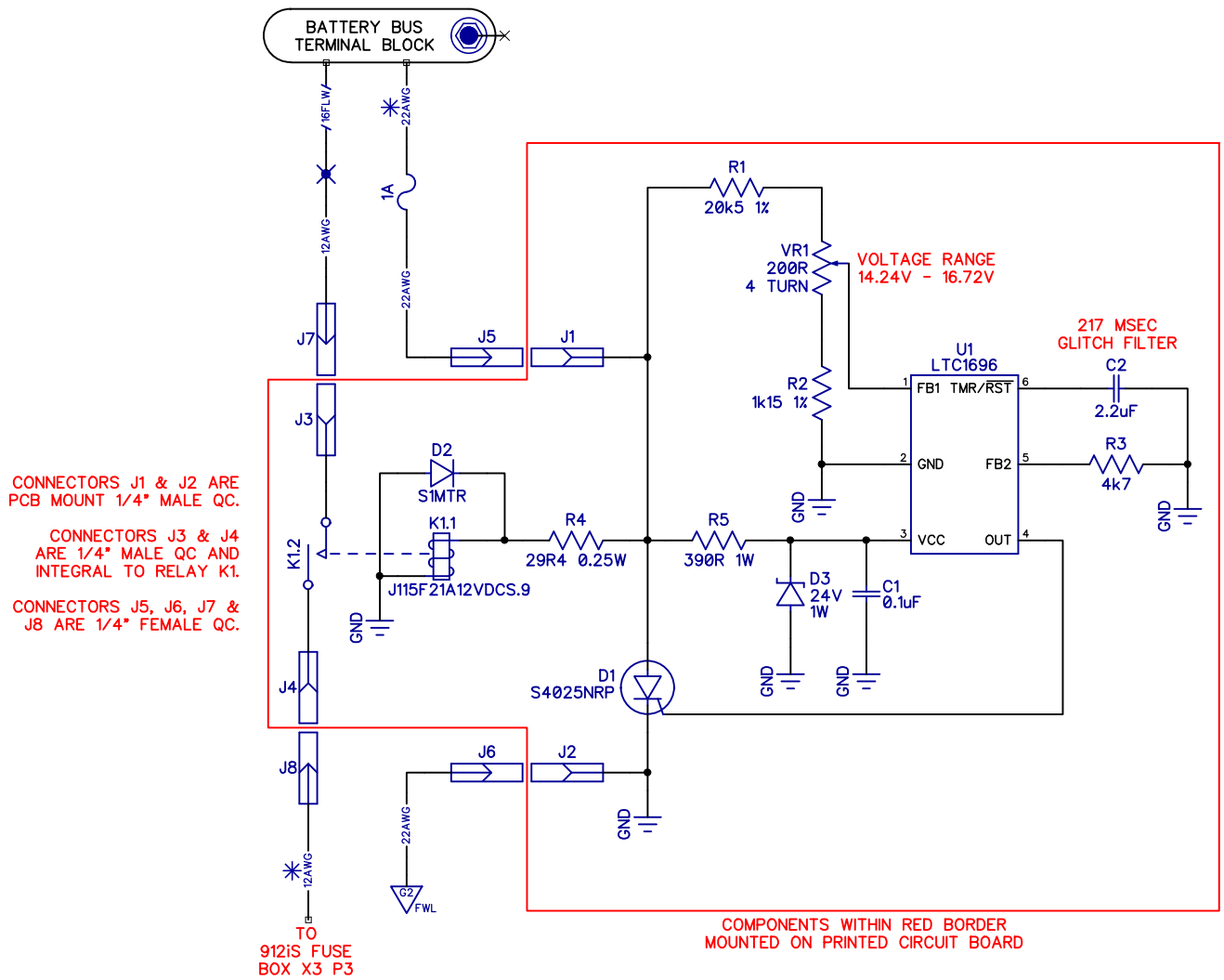

Title: Overvoltage Protection Relay Module Kitfox Series 5 Safari Rotax 912iS	**Rev:** B **Size:** 11x8.5
Date: 10 Oct 2022	**Drawn by:** EP **Sheet:** 1 of 1