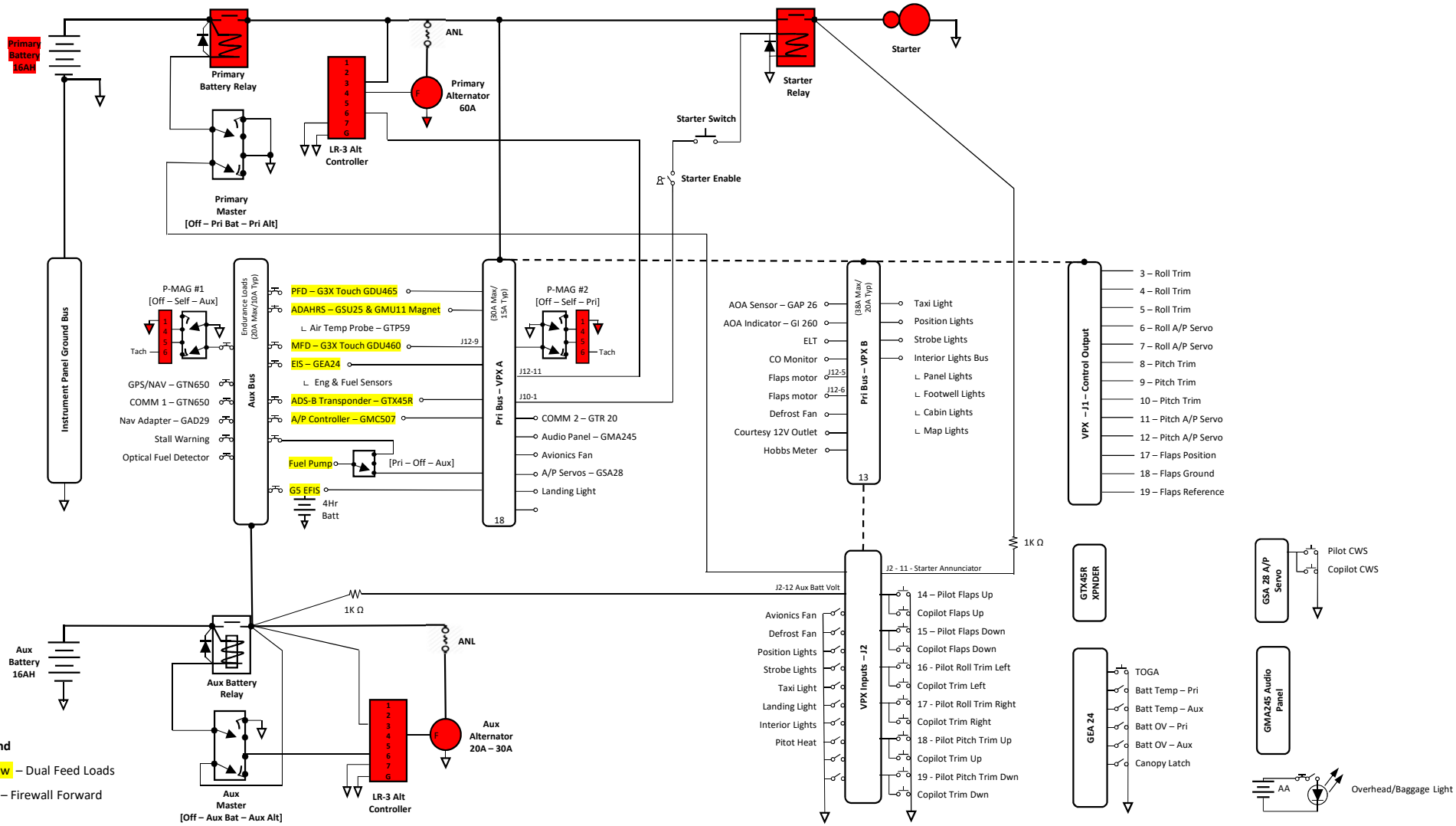RV-14A – Dual Battery/Dual Alternator/Two Bus/VPX Power Distribution System