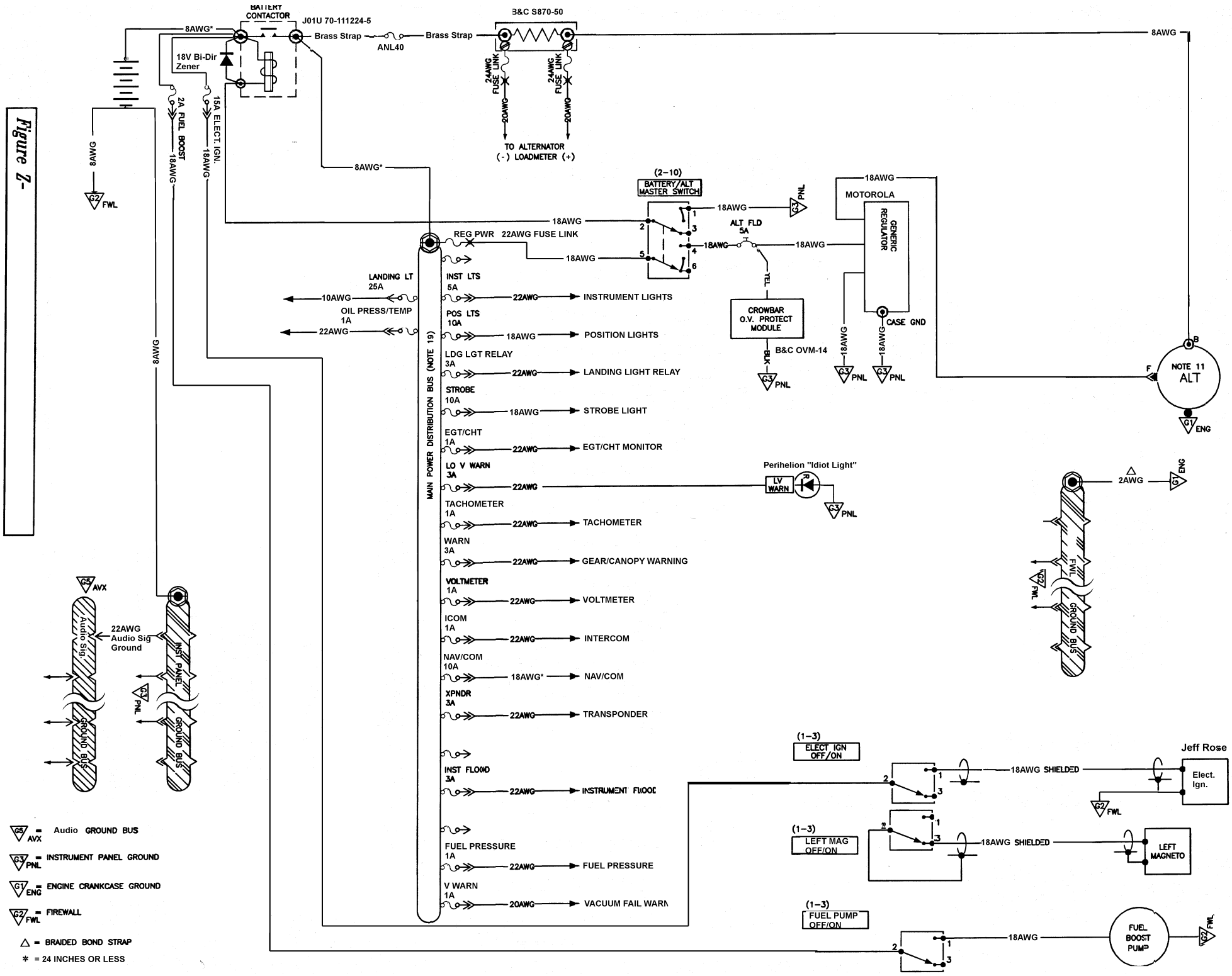
BATTERY CONTACTOR
J01U 70-111224-5
8AWG*
Brass Strap
ANL40
Brass Strap
B&C S870-50
8AWG
18V Bi-Dir Zener
24AWG FUSE LINK
24AWG FUSE LINK
20AWG
20AWG
TO ALTERNATOR
(-) LOADMETER (+)
2A FUEL BOOST
15A ELECT. IGN.
18AWG
18AWG
8AWG
G2 FWL
8AWG*
(2-10)
BATTERY/ALT MASTER SWITCH
18AWG
G3 PNL
18AWG
ALT FLD 5A
18AWG
18AWG
MOTOROLA
GENERIC REGULATOR
CASE GND
REG PWR 22AWG FUSE LINK
18AWG
LANDING LT 25A
10AWG
OIL PRESS/TEMP 1A
22AWG
INST LTS 5A
22AWG
INSTRUMENT LIGHTS
POS LTS 10A
18AWG
POSITION LIGHTS
LDG LGT RELAY 3A
22AWG
LANDING LIGHT RELAY
STROBE 10A
18AWG
STROBE LIGHT
EGT/CHT 1A
22AWG
EGT/CHT MONITOR
LO V WARN 3A
22AWG
TACHOMETER 1A
22AWG
TACHOMETER
WARN 3A
22AWG
GEAR/CANOPY WARNING
VOLTMETER 1A
22AWG
VOLTMETER
ICOM 1A
22AWG
INTERCOM
NAV/COM 10A
18AWG*
NAV/COM
XPNDR 3A
22AWG
TRANSPONDER
INST FLOOD 3A
22AWG
INSTRUMENT FLOOD
FUEL PRESSURE 1A
22AWG
FUEL PRESSURE
V WARN 1A
20AWG
VACUUM FAIL WARN
MAIN POWER DISTRIBUTION BUS (NOTE 19)
CROWBAR O.V. PROTECT MODULE
B&C OVM-14
BLK
TEL
G3 PNL
18AWG
18AWG
G3 PNL
G3 PNL
NOTE 11
ALT
B
F
G1 ENG
Perihelion "Idiot Light"
LV WARN
G3 PNL
2AWG
G1 ENG
FWL
G2 FWL
GROUND BUS
G5 AVX
Audio Sig
22AWG Audio Sig Ground
GROUND BUS
INST PANEL
G3 PNL
GROUND BUS
(1-3)
ELECT IGN OFF/ON
18AWG SHIELDED
Jeff Rose
Elect. Ign.
G2 FWL
(1-3)
LEFT MAG OFF/ON
18AWG SHIELDED
LEFT MAGNETO
(1-3)
FUEL PUMP OFF/ON
18AWG
FUEL BOOST PUMP
G2 FWL
G5 AVX = Audio GROUND BUS
G3 PNL = INSTRUMENT PANEL GROUND
G1 ENG = ENGINE CRANKCASE GROUND
G2 FWL = FIREWALL
△ = BRAIDED BOND STRAP
* = 24 INCHES OR LESS

Figure 7-